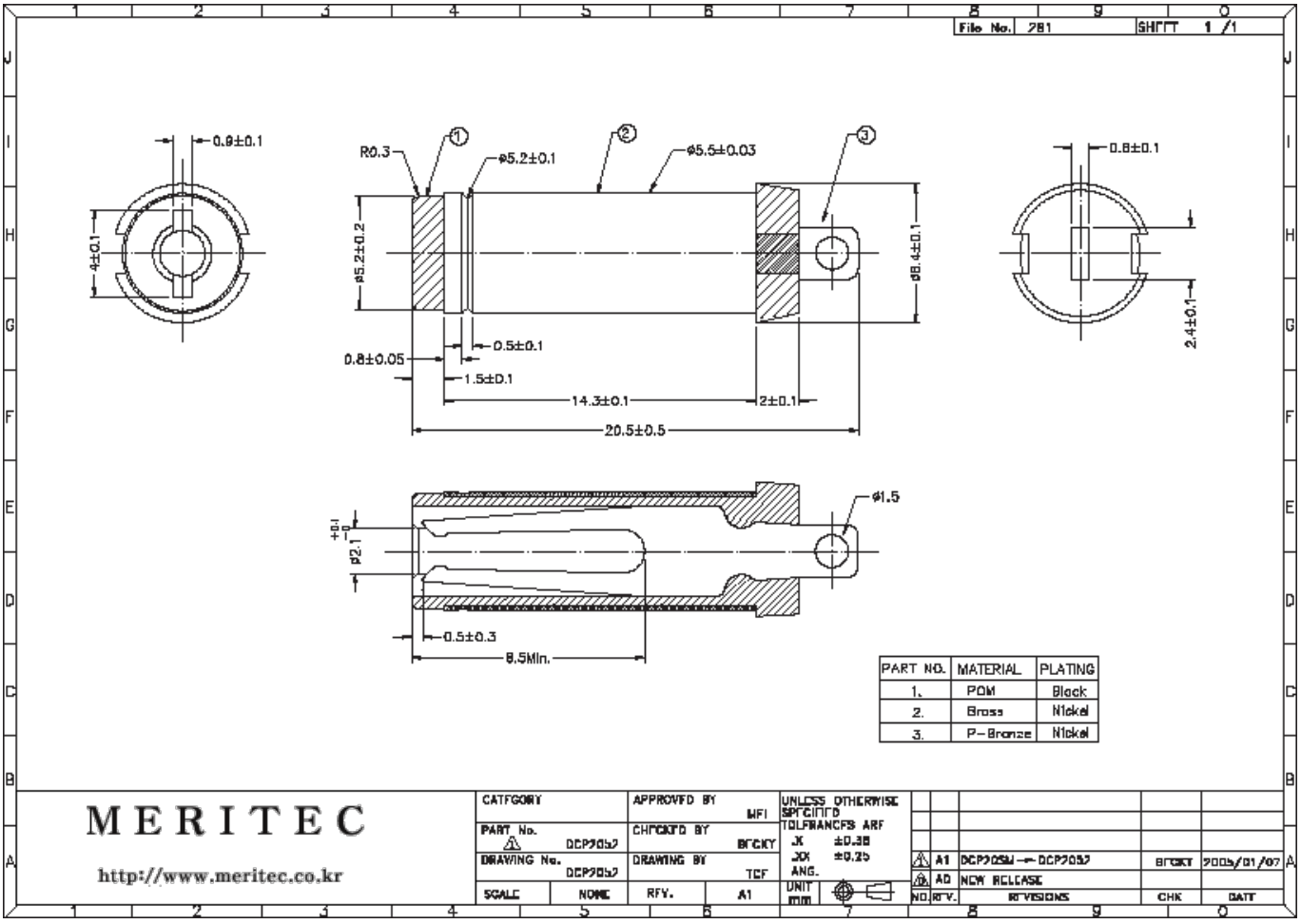

PART NO.	MATERIAL	PLATING
1.	POM	Black
2.	Brass	Nickel
3.	P-Bronze	Nickel

MERITEC

http://www.meritec.co.kr

CATEGORY		APPROVED BY	MFI
PART No.	DCP2052	CHECKED BY	BCCKY
DRAWING No.	DCP2052	DRAWING BY	TCF
SCALE	NONE	REV.	A1

UNLESS OTHERWISE SPECIFIED TOLERANCES ARE
.X ±0.38
.XX ±0.25
ANG.
UNIT mm

NO.	REV.	REVISIONS	CHK	DATE
	A1	DCP2052 → DCP2052	BCCKY	2005/01/07
	A0	NEW RELEASE		