Pitch 1.27x2.54mm (0.05"x0.1")

Pin Header Dual Row Straight Dip Type

MERITEC

G PEA2XX Series

Specifications

Current Rating: 1.0 Ampere
Insulation Resistance: 1000MΩ Min.
Dielectric Withstanding: 300V AC
Contact Resistance: 20mΩ Max.
Operating Temperature: −40°C to +105°C

Materials

Contact Material: Copper Alloy
Insulation Material: Polyester, UL 94V−0
Nylon−6T

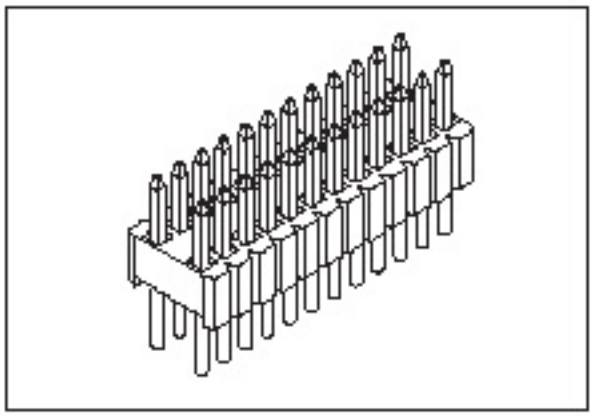

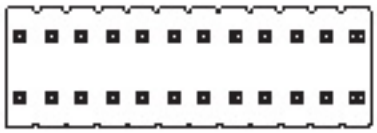

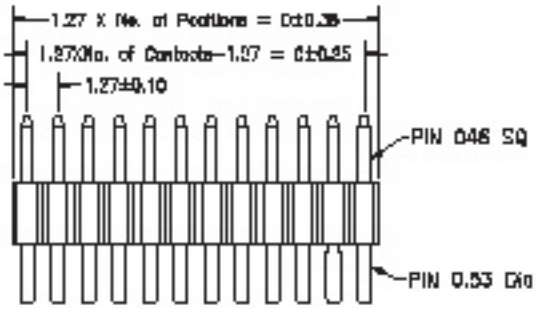

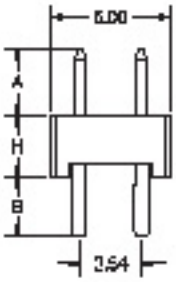

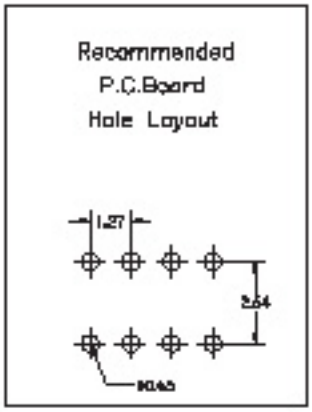

No. of Pins/Row	Dimension Information C	D	No. of Pins/Row	Dimension Information C	D	No. of Pins/Row	Dimension Information C	D	No. of Pins/Row	Dimension Information C	D
02	1.27	2.54	12	13.97	15.24	22	26.67	27.94	32	39.37	40.64
03	2.54	3.81	13	15.24	16.51	23	27.94	29.21	33	40.64	41.91
04	3.81	5.08	14	16.51	17.78	24	29.21	30.48	34	41.91	43.18
05	5.08	6.35	15	17.78	19.05	25	30.48	31.75	35	43.18	44.45
06	6.35	7.62	16	19.05	20.32	26	31.75	33.02	36	44.45	45.72
07	7.62	8.89	17	20.32	21.59	27	33.02	34.29	37	45.72	46.99
08	8.89	10.16	18	21.59	22.86	28	34.29	35.56	38	46.99	48.26
09	10.16	11.43	19	22.86	24.13	29	35.56	36.83	39	48.26	49.53
10	11.43	12.70	20	24.13	25.40	30	36.83	38.10	40	49.53	50.80
11	12.70	13.97	21	25.40	26.67	31	38.10	39.37			

Ordering Information

G PEA2XX − XX XX A XX

HEIGHT OPTION

H
- 01=2.54mm
- 02=3.00mm
- 03=1.70mm
- ...

No. of Pins per Row
02 ~ 40

Contact Plating
- 01 : Tin/Lead
- 02 : Full Gold

Duplex plating
- 05 : Gold Flash/Tin
- ...

Pin Length (A/B)

A/B: Custom Length Available